International Journal of Enhanced Research in Science Technology & Engineering, ISSN: 2319-7463
Vol. 3 Issue 6, June-2014, pp: (186-192), Impact Factor: 1.252, Available online at: www.erpublications.com

An analytical study of total harmonics reduction in AC Chopper by using BFO techniques

Deepak Kumar[1], Pawan Rana[2]
[12]Dept. of Electrical Engineering, RPIIT Bastara, Haryana, India

Abstract: Harmonics in power distribution system are current or voltage that are integer multiples of fundamental frequency. For example if the fundamental frequency 50 Hz, then the 2-nd harmonics is 100Hz, the 3-rd is 150Hz, etc. A pure voltage or current sine wave has no distortion and no harmonics but non sinusoidal wave has distortion and harmonics. To quantify the distortion, the term total harmonics distortion (THD) is used. The THD value is the effective value of all the harmonics current added together, compared with the value of the fundamental current. Wave form distortion can be analyzed using fourier analysis as a periodical oscillation at different frequency. The study includes the analytical survey of total harmonics reduction in AC Chopper by using BFO techniques

Keywords: harmonics, chopper, power system, electricity, Bacterial Foraging Optimization (BFO).

1. Introduction

Harmonics have existed in power systems for many years. In the past, most electrical equipment is using balance linear load. A linear load in a power system distribution is a component in which the current and voltage are perfect sinusoidal. Examples of linear loads are induction motor, heaters and incandescent lamps. But the rapid increase in the electronics device technology such as diode, thyristors, etc cause industrial loads to become non-linear. These components are called solid state electronic or non-linear load. The non-linear load connected to the power system distribution will generate harmonics current and voltage.

The harmonics current injected on power distribution system caused by nonlinear load, and they can damage equipment overtime by sustained overheating or cause sudden failures due to resonant conditions. In order to control harmonics, IEEE Standard 519, “Recommended Practices and Requirements for Harmonic Control in Electrical Power Systems,” was adopted. IEEE Standard 519 limitations on voltage and current harmonics in order to ensure that harmonic distortion levels throughout the entire electrical distribution system, from utility to consumer, will remain low enough for the system to function properly.

1.1 Effects of Harmonic Distortion

The effect of current distortion on power distribution systems can be serious, primarily because of the increased current flowing in the system. In other words, because the harmonic current doesn't deliver any power, its presence simply uses up system capacity and reduces the number of loads that can be powered. Harmonic current occur in a facility’s electrical system can cause equipment malfunction, data distortion, transformer and motor insulation failure, overheating of neutral buses, tripping of circuit breakers, and solid-state component breakdown. The cost of these problems can be enormous. Harmonic currents also increase heat losses in transformers and wiring. Since transformer impedance is frequency dependent, increasing with harmonic number, the impedance at the 5th harmonic is five times that of the fundamental frequency. So each ampere of 5th harmonic current causes five times as much heating as an ampere of fundamental current. More specifically, the effects of the harmonics can be observed in many sections of electrical equipment and a lot machines and motors.

Capacitors used by both electricity suppliers and customers to improve their power factor. There is an intermediate range of frequencies where the capacitive and inductive effects can combine to give very high impedance. A small harmonic current

within this frequency range can give a very high and undesirable harmonic voltage. This is the condition, which is called resonance. At harmonic frequencies, from the perspective of harmonic sources, shunt capacitors appear to be in parallel with the equivalent system inductance as shown in the equivalent circuit in Figure 1 PCC is the nearest point that the additional installation might be added. At the frequency where capacitor reactance Xc and the total system reactance are equal, the apparent impedance of the parallel combination of inductance and capacitance becomes very large. This results in the typical parallel resonance condition.

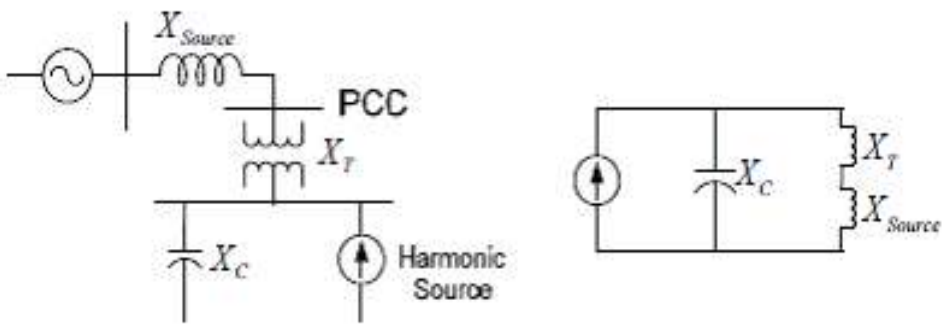

(a) **(b)**

Figure 1: The effect of capacitor size on parallel resonant frequency (a) System with potential for problem parallel harmonic (b) Equivalent circuit

1.2 Problem Formulation

Many applications, such as lighting control, industrial heating, soft start induction motors, and speed controllers for fans and pumps, require variable AC voltage from fixed AC source. There are two methods to achieve that requirement. The first method is to vary the firing angle of thyristor for controlling the output voltage average. The advantages of this technique are simplicity of the control circuit and capability of controlling a large amount of economical power. However, the delay of firing angle causes discontinuation of power flow to appear at both input and output sides and significant harmonics in load current. This method causes a lagging input power factor (PFi) when the firing angle is high. The second method is to use the pulse width modulation (PWM) controlling the power switches. The output voltage average is controlled by PWM duty cycle. This process produces the input-output current/voltage waveforms to be near sinusoidal. Therefore, the total harmonic distortion of input current, THDi, is low and displacement factor is high. As a result, the input power factor, PFi, is high. However, the fixed PWM duty cycle AC chopper causes some disadvantages: (1) the input power factor, PFi, depends on the load power factor and (2) the total harmonic distortion of output voltage, THDv, is still high.

There are two groups to solve the problem of fixed PWM duty cycle AC chopper. In the first group, the optimal parameters of PWM AC chopper were selected to produce the unity input power factor. However, it is suitable for the applications requiring the sinusoidal output voltage and needing high switching frequency. The second group was to find the optimal PWM switching angles. It can be done by varying the reference carrier waveform to triangular waveform, although it can improve power factors yet with a significant loss of load voltage.

2. Literature Review

This paper presents a new pulse width modulation (PWM) switching technique for a single phase AC chopper. In the proposed technique, the switching frequency is fixed and the optimal PWM switching angles are obtained by using bee colony optimization. This process can improve the input power factor and reduce the total harmonic distortion of the output voltage. The performance of the proposed technique is compared with that of the conventional PWM through the simulation and experimental results.

A novel passive filter is proposed in this paper, with an objective of eliminating the common-mode and differential-mode voltage generated. For determining the parameters of filter, the filter transfer function is utilized to achieve a desirable filtering performance. The detailed design procedure of the filter parameters is given. The validity and effectiveness of proposed filter are supported by the simulation and experimental results carried out on 220V/3Hp induction motor system.

Harmonic Elimination in a multilevel inverters is an optimization problem which is solved by applying particle swarm optimization (PSO) technique. The derived equation for the computation of total harmonic distortion (THD) of the output voltage of the multilevel inverter is used as the objective function in PSO algorithm. The objective function used is to reduce the THD of the multilevel inverter and obtain the corresponding switching angles with the elimination of possible lower order harmonics. In this paper a pseudo code based algorithm is proposed to deal with inequality constraints which will helps in accelerating the optimization process. The proposed method is applied for seven level cascade inverter to eliminate the 5th and 7th order harmonics to reduce the total harmonic distortion .This proposed PSO algorithm is effective in reducing the total harmonic distortion corresponding the range of modulation index. The simulation results shows that the proposed PSO method is indeed capable of obtaining higher quality of solutions to eliminate 5th and 7th order harmonics and to reduce the total harmonic distortion of 7- level cascade inverter.

Conventional mathematical modeling-based approaches are incompetent to solve the electrical power quality problems, as the power system network represents highly nonlinear, nonstationary, complex system that involves large number of inequality constraints. In order to overcome the various difficulties encountered in power system such as harmonic current, unbalanced source current, reactive power burden, active power filter (APF) emerged as a potential solution. This paper proposes the implementation of particle swarm optimization (PSO) and bacterial foraging optimization (BFO) algorithms which are intended for optimal harmonic compensation by minimizing the undesirable losses occurring inside the APF itself. The efficiency and effectiveness of the implementation of two approaches are compared for two different conditions of supply. The total harmonic distortion (THD) in the source current which is a measure of APF performance is reduced drastically to nearly 1% by employing BFO. The results demonstrate that BFO outperforms the conventional and PSO-based approaches by ensuring excellent functionality of APF and quick prevail over harmonics in the source current even under unbalanced supply.

This work presents a method capable of designing power filters to reduce harmonic distortion and correct the power factor. The proposed method minimizes the designed filters' total investment cost such that the harmonic distortion is within an acceptable range. The optimization process considers the discrete nature of the size of the element of the filter. This new formulation is a combinatorial optimization problem with a non-differentiable objective function. In addition a solution methodology based on an optimization technique – simulated annealing is proposed to determine the size of filters with minimum cost. The proposed technique is compared with the sequential unconstrained minimization technique in terms of performance and investment cost, via the industrial distribution system.

This paper presents optimal sizing of FACTS device, which is attained by the searching technique of bacteria foraging along with optimal sizing of FACTS device. Static Var Compensator (SVC) is one of the FACTS device, employed for improvement of voltage profile and loss minimization. The specific design of SVC provide the real power loss minimization along with increase of voltage profile. The proposed algorithm is made evaluated in IEEE 14 and IEEE 30 bus system. The test results are describes that enhancement of voltage profile along with loss minimization in the transmission line.

Bacterial foraging optimization algorithm (BFOA) has been widely accepted as a global optimization algorithm of current interest for distributed optimization and control. BFOA is inspired by the social foraging behavior of Escherichia coli. BFOA has already drawn the attention of researchers because of its efficiency in solving real-world optimization problems arising in several application domains. The underlying biology behind the foraging strategy of E.coli is emulated in an extraordinary manner and used as a simple optimization algorithm. This paper starts with a lucid outline of the classical BFOA. It then analyses the dynamics of the simulated chemotaxis step in BFOA with the help of a simple mathematical model. Taking a cue from the analysis, it presents a new adaptive variant of BFOA, where the chemotactic step size is adjusted on the run according to the current fitness of a virtual bacterium. Nest, an analysis of the dynamics of reproduction operator in BFOA is also discussed. The chapter discusses the hybridization of BFOA with other optimization techniques and also provides an account of most of the significant applications of BFOA until date.

This paper proposes a technique to design the switching angles in a PWM AC voltage controller using genetic algorithms (GA) and distributed artificial neural network (ANN). In the proposed technique, GA is used to evaluate the turn on and turn off angles of PWM pattern to reduce the low order harmonic content in PWM output voltage. The results from GA are then used to train the distributed ANN. The advantages gained from the proposed technique are the reduction of complexity of training process and the improvement of the ability of the ANN. In addition, the total harmonic distortion of voltage, which calculated from the low order harmonic content, is adopted in the proposed fitness function. Thus, the load value is not necessary to be known before stating the proposed technique. Simulation results show that the proposed technique is superior to the conventional fixed-duration pulse technique.

A simple Matlab/Simulink model is presented to implement SVPWM for three-phase VSI. A brief review of the VSI model is also reported based on space vector representation. A Matlab/Simulink based model for implementation of SVPWM is presented. The step-by- step model development is reported. The presented model gives an insight into the SVPWM. By varying the magnitude of the input reference different modulation index can be achieved.
In this paper, an implementation of Selective Harmonic Elimination Pulse Width Modulation (SHEPWM) as applied to a single phase AC chopper using Generalized Hopfield Neural Network (GHNN) is designed and implemented. The objective of this paper is to eliminate 5, 7, 11, 13 th order harmonics in the output voltage waveform of the AC chopper while retaining fundamental component to the desired value. The switching angles corresponds to the above objective are obtained by solving a set of non-linear algebraic transcendental equations. The problem is redrafted as an optimization problem and it is solved by using GHNN. An energy function is formulated for the above problem and a set of differential equations describing the behavior of GHNN were formed by using the derived energy function. These set of differential equations are stiff in nature and it is numerically solved by the semi-implicit midpoint rule based extrapolation method with suitable initial conditions. The initial conditions are obtained from a look up table. A MATLAB simulation was carried out and the FFT analysis of the simulated output voltage waveform confirms the effectiveness of the proposed method. Hence, the proposed method proves that it is much applicable in the industrial applications.

3. AC Chopper & BFO

In this chapter ac chopper and BFO are described.

3.1 AC Chopper

AC voltage regulators have been widely used in applications such as industrial heating, line conditioners, lighting dimmers, soft-starting of induction motors and speed control of pumps. To realize the regulation, phase control technique is extensively utilized. This technique has the advantages of simplicity in main & control circuit, but suffers from poor power factor, high low order harmonic content in both of load and supply side. Bulk filters are essential and discontinuity of power flow is inevitable at both input and output sides. The AC voltage regulators can be replaced by pulse width modulation (PWM) AC choppers, which have better performances. In this case, the input voltage is chopped into segments and the output voltage level is decided by controlling the duty cycle of the chopper switching function. The AC choppers made by four segments switches were delayed due to the commutation problems.
To assure safe commutation without high voltage spikes, some PWM control principles were developed. However, converters robustness depended on the control accuracy and kept high the risk of over voltages and over currents appearance. Recently, different AC choppers topologies using a reduced number of switches or standard commutation cells in two quadrants were developed. To increase the converters robustness simple DC snubbers consisting of only a capacitor attached directly to commutation cells were proposed. In this chapter some basic topologies of direct and indirect PWM AC choppers are comparatively studied. Being different from the direct AC-AC conversion, the indirect one can produce a fast reversible phase of input voltage. This chapter presents modern line conditioners with voltage up, down and up/down capability. They are based on serial compensation principle and use basic AC choppers. The progress realized in controlled power devices design and achievement allowed the appearance of so-called matrix converters made by four quadrants switches. Numerous studies were developed for energy exchanges using such matrix converters. However, their use in practice is delayed due to the switches commutation problems.

3.1.1 Single-phase basic PWM AC choppers Direct topology

By the supply mode, direct PWM AC choppers are classified in differential and non-differential topologies (Fig.2). Both structures are made by two standard commutation cells with IGBTs bidirectional in current and unidirectional in voltage.

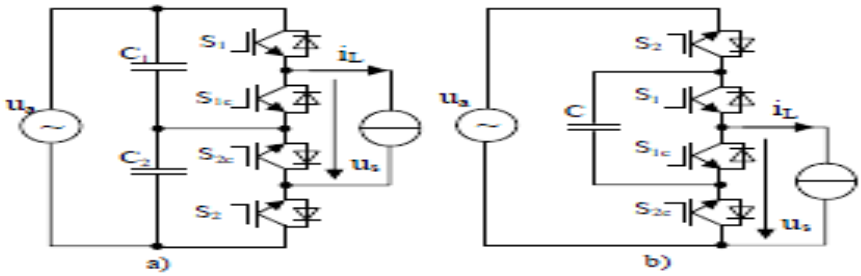

Fig.2. Basic single-phase direct PWM AC choppers, buck type: a)differential topology; b) non-differential topology

DC snubbers (C1, C2 and C) are attached directly to commutation cells to absorb the energy stored in line stray inductance. These snubbers have a very simple structure, consisting of only a capacitor, with no need for discharging resistors. In differential topology (Fig.3.1a) the S2 and S1 switches, the voltage source and the load are serial connected. By moving S2 switch between the voltage source and S1 switch the non-differential topology is obtained (Fig.3.1b). This second structure presents the neutral wire continuity advantage. Both converters have the same control, depending on the voltage source ua sign. In this way, if ua is positive, S1 and S1c switches are PWM controlled with a constant duty ratio (α), while S2 and S2c switches are fully turned on. When the sign of the voltage source is changed, the switching pattern is reversed, S2 and S2c being complementary PWM controlled with a constant duty ratio and S1 and S1c are fully turned on. In these switching patterns the current path always exits whatever the inductor current direction. Since two switches are always turned on during the half period of the voltage source the switching loss is significantly reduced. In the buck conversion topology the output voltage is proportional with the duty ratio:

$$us = \alpha \cdot ua \quad (1)$$

During one switching cycle, PWM AC choppers present three possible operating modes: active mode, freewheeling mode and bypass mode (Fig.3).

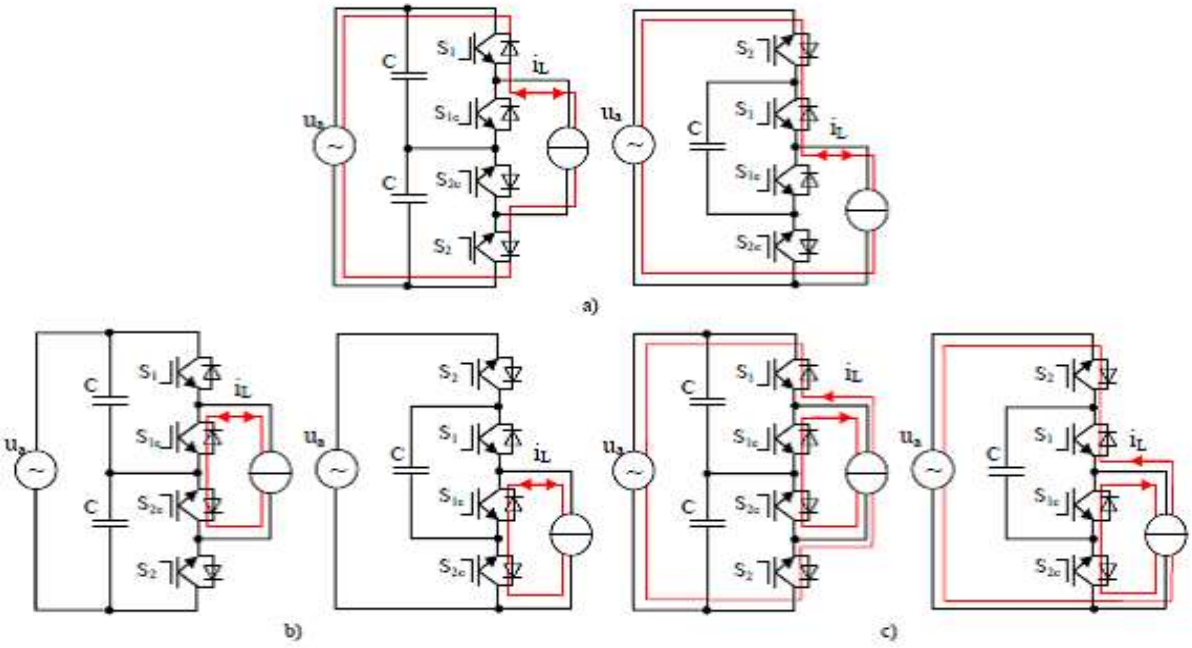

Fig.3. Current's paths for operating modes: a) active mode; b) freewheeling mode; c) bypass mode.

In the active mode the inductor current iL passes through input and output side and provides output energy. The S1 and S2 switches are turned on and the inductor current iL passes through S1 and the diode across S2 for iL>0 or S2 and the diode across S1 for iL<0, as shown in Fig.3.a. The freewheeling mode is complementary to the active mode. During this mode the switches S1c and S2c are turned on, so that the inductor current freewheels through the output side, as shown in Fig.3.2b. The bypass mode is imposed by the non-linear regime of power devices. When the input voltage ua is positive, the switches S2 and S2c are turned on for safe commutation. During the dead time the inductor current iL passes in the positive direction through the load, the S2c switch and the diode across S1c. The negative inductor current iL passes through the voltage source, the S2 switch and the diode across S1. Thus, a current path for the inductor current always exists in every current direction during the bypass mode. For ua>0 the current's paths are shown in Fig.3.

4. Proposed Work

4.1 Pulse-Width Modulation

Pulse-width modulation (PWM), or pulse-duration modulation (PDM), is a modulation technique that conform the width of the pulse, formally the pulse duration, based on modulator signal information. Although this modulation technique can be used to encode information for transmission, its main use is to allow the control of the power supplied to electrical devices, especially to inertial loads such as motors. The average value of voltage (and current) fed to the load is controlled by turning the switch between supply and load on and off at a fast pace. The longer the switch is on compared to the off periods, the higher the power supplied to the load is. The PWM switching frequency has to be much faster than what would affect the load, which is to say the device that uses the power. The term duty cycle describes the proportion of 'on' time to the regular interval or 'period' of time; a low duty cycle corresponds to low power, because the power is off for most of the time. Duty cycle is expressed in percent, 100% being fully on. The main advantage of PWM is that power loss in the switching devices is very low. When a switch is off there is practically no current, and when it is on, there is almost no voltage drop across the switch. Power loss, being the product of voltage and current, is thus in both cases close to zero. PWM also works well with digital controls, which, because of their on/off nature, can easily set the needed duty cycle.

Pulse-width modulation uses a rectangular pulse wave whose pulse width is modulated resulting in the variation of the average value of the waveform. If we consider a pulse waveform $f(t)$, with period T, low value y_{min}, a high value y_{max} and a duty cycle D (see figure 4.1), the average value of the waveform is given by:

$$\bar{y} = \frac{1}{T}\int_0^T f(t)\,dt.$$

As $f(t)$ is a pulse wave, its value is y_{max} for $0 < t < D \cdot T$ and y_{min} for $D \cdot T < t < T$. The above expression then becomes:

$$\begin{aligned}\bar{y} &= \frac{1}{T}\left(\int_0^{DT} y_{max}\,dt + \int_{DT}^{T} y_{min}\,dt\right)\\ &= \frac{D \cdot T \cdot y_{max} + T\,(1-D)\,y_{min}}{T}\\ &= D \cdot y_{max} + (1-D)\,y_{min}.\end{aligned}$$

This latter expression can be fairly simplified in many cases where $y_{min} = 0$ as $\bar{y} = D \cdot y_{max}$. From this, it is obvious that the average value of the signal ($\bar{y}$) is directly dependent on the duty cycle D. The simplest way to generate a PWM signal is the interceptive method, which requires only a sawtooth or a triangle waveform (easily generated using a simple oscillator) and a comparator. When the value of the reference signal (the red sine wave in figure 4.1) is more than the modulation waveform (blue), the PWM signal (magenta) is in the high state, otherwise it is in the low state.

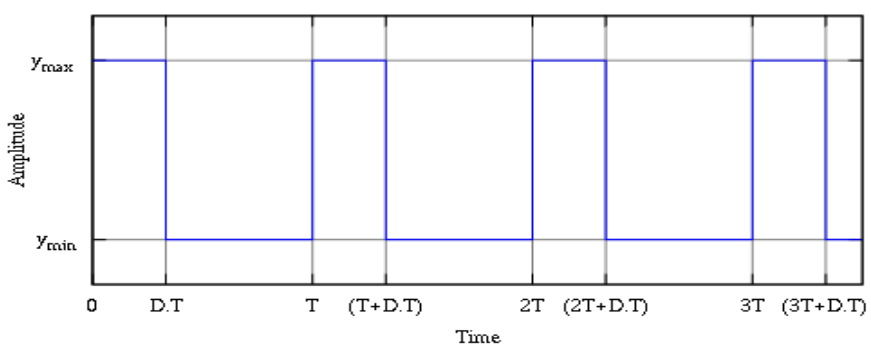

Figure 4: Pulse wave, showing the definitions of y_{min}, y_{max} and D.

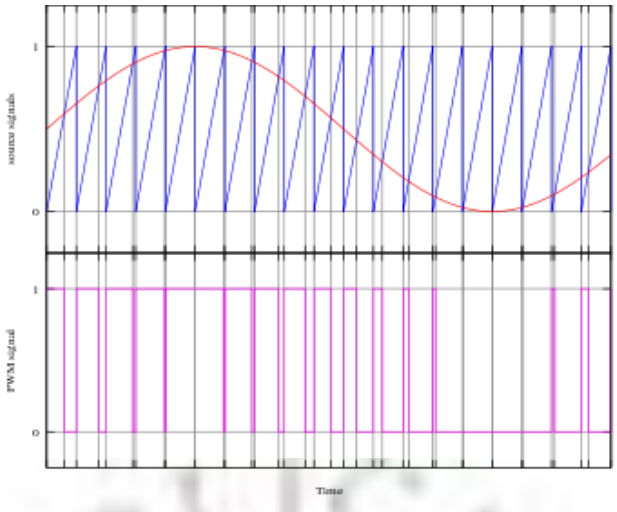

Figure 4.1: A simple method to generate the PWM pulse train corresponding to a given signal is the interceptive PWM: the signal (here the red sinewave) is compared with a sawtooth waveform (blue). When the latter is less than the former, the PWM signal (magenta) is in high state (1). Otherwise it is in the low state (0).

5. Results & Future Scope

AC chopper has various industrial applications. The on off switching of chopper produces harmonics which if not suppressed, may gives false triggering to load attached to ac chopper. To avoid this harmonic distortion are suppressed in chopper. It has been shown in proposed work that switching time of chopper depends upon controlling voltage in IGBTs. To suppress low harmonics PWM is used as controlling device of IGBTs. Further it is also shown that carrier signal affects the duty cycle of PWM. So concluding by this that ultimately phase of carrier signal has to be controlled. For this purpose optimisation technique like BFO has been used. The objective function of BFO uses total harmonic distortion and RMS voltage output to minimise the objective function. When BFO optimisation is used then it sets the optimum value of carrier signal phase angle, resulting in reduction of harmonics in ac chopper output. Results show that reference voltage varies then THD also varies. Reference voltage above 140 volt for sinusoidal input of 220 V in ac chopper gives good result and further increase in reference voltage results in decrease in THD.

References

[1]. Ying-Tung Hsiao," Design of Filters for Reducing Harmonic Distortion and Correcting Power Factor in Industrial Distribution Systems" Tamkang Journal of Science and Engineering, Vol. 4, No. 3, pp. 193-199 (2001)

[2]. Iman Soltani, Mohammad Sarvi, and Fatemeh Salahian," Various Types of Particle Swarm Optimization-based Methods for Harmonic Reduction of Cascade Multilevel Inverters for renewable energy sources" International Journal of Innovation and Applied Studies ISSN 2028-9324 Vol. 2 No. 4 Apr. 2013, pp. 671-681

[3]. Geetika Gera, Ashish Malik, Darshan Kumar," Reduction of Total Harmonic Distortion in Power Invertors Using Genetic Algorithm" www.ijera.com ISSN : 2248-9622, Vol. 3, Issue 5, Sep-Oct 2013, pp.761-766

[4]. Wanchai Khamsen, Apinan Aurasopon and Worawat Sa-ngiamvibool," Power Factor Improvement and Voltage Harmonics Reduction in Pulse Width Modulation AC Chopper Using Bee Colony Optimization" IETE Technical Review Vol 30 Issue 3 May-Jun 2013,Pp-173-182.

[5]. Akash A. Chandekar, R.K.Dhatrak," Some Approaches to Reduce Total Harmonic Distortion & Common Mode Voltage of Inverter Fed Induction Motor" IJERA Vol. 3, Issue 4, Jul-Aug 2013, pp.760-764

[6]. Pairoj Piyarungsan and Somyot Kaitwanidvilai,"Harmonic Reduction Technique in PWM AC Voltage Controller using Particle Swarm Optimization and Artificial Neural Network" The Journal of Industrial Technology, Vol. 9, No. 1 January – April 2013.

[7]. Ali Ajami,Mohammad Reza Jannati Oskuee, and Ata Ollah Mokhberdoran," Implementation of Novel Technique for Selective Harmonic Elimination in Multilevel Inverters Based on ICA" Advances in Power Electronics Volume 2013, Article ID 847365, 10 pages

[8]. N. Prashanth, B. Kumar, J. Yadagiri, A.Dasgupta," Harmonic Minimization In Multilevel Inverters By Using PSO" ACEEE Int. J. on Control System and Instrumentation, Vol. 02, No. 03, October 2011

[9]. Sushree Sangita Patnaik and Anup Kumar Panda," Particle Swarm Optimization and Bacterial Foraging Optimization Techniques for Optimal Current Harmonic Mitigation by Employing Active Power Filter" Applied Computational Intelligence and Soft Computing Volume 2012, Article ID 897127, 10 pages.